UNIVERSITY OF CAMBRIDGE INTERNATIONAL EXAMINATIONS
General Certificate of Education
Advanced Subsidiary Level and Advanced Level

PHYSICS **9702/11**

Paper 1 Multiple Choice **October/November 2013**

1 hour

Additional Materials: Multiple Choice Answer Sheet
Soft clean eraser
Soft pencil (type B or HB is recommended)

9351859288

READ THESE INSTRUCTIONS FIRST

Write in soft pencil.
Do not use staples, paper clips, highlighters, glue or correction fluid.
Write your name, Centre number and candidate number on the Answer Sheet in the spaces provided unless this has been done for you.
DO **NOT** WRITE IN ANY BARCODES.

There are **forty** questions on this paper. Answer **all** questions. For each question there are four possible answers **A**, **B**, **C** and **D**.
Choose the **one** you consider correct and record your choice in **soft pencil** on the separate Answer Sheet.

Read the instructions on the Answer Sheet very carefully.

Each correct answer will score one mark. A mark will not be deducted for a wrong answer.
Any working should be done in this booklet.
Electronic calculators may be used.

This document consists of **24** printed pages.

© UCLES 2013

Data

speed of light in free space, $c = 3.00 \times 10^{8}\,\text{m s}^{-1}$

permeability of free space, $\mu_0 = 4\pi \times 10^{-7}\,\text{H m}^{-1}$

permittivity of free space, $\varepsilon_0 = 8.85 \times 10^{-12}\,\text{F m}^{-1}$

$\left(\dfrac{1}{4\pi\varepsilon_0} = 8.99 \times 10^{9}\,\text{m F}^{-1}\right)$

elementary charge, $e = 1.60 \times 10^{-19}\,\text{C}$

the Planck constant, $h = 6.63 \times 10^{-34}\,\text{J s}$

unified atomic mass constant, $u = 1.66 \times 10^{-27}\,\text{kg}$

rest mass of electron, $m_\text{e} = 9.11 \times 10^{-31}\,\text{kg}$

rest mass of proton, $m_\text{p} = 1.67 \times 10^{-27}\,\text{kg}$

molar gas constant, $R = 8.31\,\text{J K}^{-1}\,\text{mol}^{-1}$

the Avogadro constant, $N_\text{A} = 6.02 \times 10^{23}\,\text{mol}^{-1}$

the Boltzmann constant, $k = 1.38 \times 10^{-23}\,\text{J K}^{-1}$

gravitational constant, $G = 6.67 \times 10^{-11}\,\text{N m}^2\,\text{kg}^{-2}$

acceleration of free fall, $g = 9.81\,\text{m s}^{-2}$

© UCLES 2013

Formulae

uniformly accelerated motion, $s = ut + \frac{1}{2}at^2$

$v^2 = u^2 + 2as$

work done on/by a gas, $W = p\Delta V$

gravitational potential, $\phi = -\frac{Gm}{r}$

hydrostatic pressure, $p = \rho gh$

pressure of an ideal gas, $p = \frac{1}{3}\frac{Nm}{V}\langle c^2 \rangle$

simple harmonic motion, $a = -\omega^2 x$

velocity of particle in s.h.m., $v = v_0 \cos \omega t$

$v = \pm \omega \sqrt{(x_0^2 - x^2)}$

electric potential, $V = \frac{Q}{4\pi\varepsilon_0 r}$

capacitors in series, $1/C = 1/C_1 + 1/C_2 + \ldots$

capacitors in parallel, $C = C_1 + C_2 + \ldots$

energy of charged capacitor, $W = \frac{1}{2}QV$

resistors in series, $R = R_1 + R_2 + \ldots$

resistors in parallel, $1/R = 1/R_1 + 1/R_2 + \ldots$

alternating current/voltage, $x = x_0 \sin \omega t$

radioactive decay, $x = x_0 \exp(-\lambda t)$

decay constant, $\lambda = \frac{0.693}{t_{\frac{1}{2}}}$

© UCLES 2013

1 Which row shows an SI base quantity with its correct unit?

	SI base quantity	unit
A	charge	coulomb
B	current	ampere
C	potential difference	volt
D	temperature	degree Celsius

2 A pendulum bob is held stationary by a horizontal force H. The three forces acting on the bob are shown in the diagram.

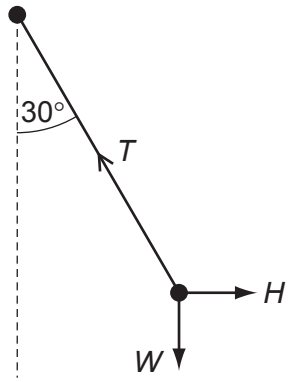

The tension in the string of the pendulum is T. The weight of the pendulum bob is W.

Which statement is correct?

A $H = T\cos 30°$

B $T = H\sin 30°$

C $W = T\cos 30°$

D $W = T\sin 30°$

Space for working

3 The drag coefficient C_d is a number with no units. It is used to compare the drag on different cars at different speeds. It is given by the equation

$$C_d = \frac{2F}{\rho v^n A}$$

where F is the drag force on the car, ρ is the density of the air, A is the cross-sectional area of the car and v is the speed of the car.

What is the value of n?

A 1 **B** 2 **C** 3 **D** 4

4 A signal that repeats periodically is displayed on the screen of a cathode-ray oscilloscope.

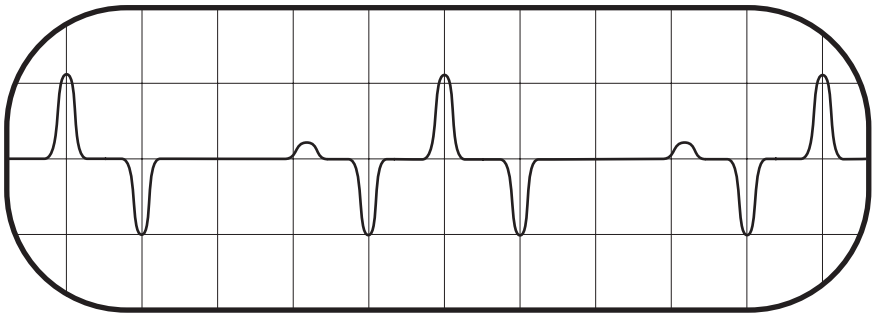

The screen has 1 cm squares and the time base is set at 2.00 ms cm^{-1}.

What is the frequency of this periodic signal?

A 50 Hz **B** 100 Hz **C** 125 Hz **D** 200 Hz

Space for working

5 A micrometer screw gauge is used to measure the diameter of a small uniform steel sphere. The micrometer reading is 5.00 mm ± 0.01 mm.

What will be the percentage uncertainty in a calculation of the volume of the sphere, using these values?

A 0.2% **B** 0.4% **C** 0.6% **D** 1.2%

6 One object moves directly from P to R.

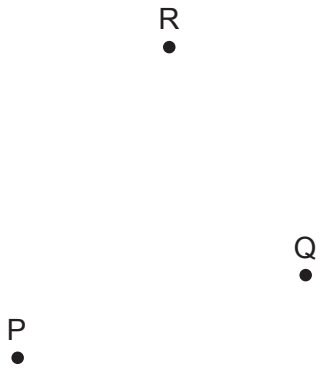

In a shorter time, a second object moves from P to Q to R.

Which statement about the two objects is correct for the journey from P to R?

A They have the same average speed.

B They have the same average velocity.

C They have the same displacement.

D They travel the same distance.

Space for working

7 The graph shows how velocity v varies with time t for a bungee jumper.

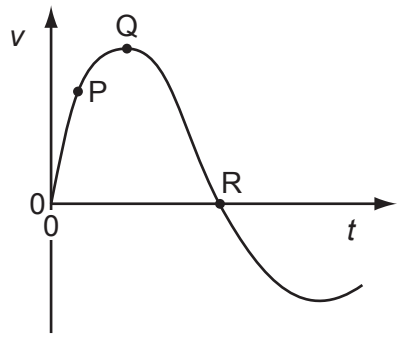

At which point is the bungee jumper momentarily at rest and at which point does she have zero acceleration?

	jumper at rest	jumper with zero acceleration
A	Q	P
B	Q	R
C	R	Q
D	R	R

8 An aeroplane travels at an average speed of $600\,km\,h^{-1}$ on an outward flight and at $400\,km\,h^{-1}$ on the return flight over the same distance.

What is the average speed of the whole flight?

A $111\,m\,s^{-1}$ **B** $167\,m\,s^{-1}$ **C** $480\,km\,h^{-1}$ **D** $500\,km\,h^{-1}$

9 What is meant by the mass and by the weight of an object on the Earth?

	mass	weight
A	its momentum divided by its velocity	the work done in lifting it one metre
B	the gravitational force on it	the property that resists its acceleration
C	the pull of the Earth on it	its mass divided by the acceleration of free fall
D	the property that resists its acceleration	the pull of the Earth on it

Space for working

10 An astronaut of mass m in a spacecraft experiences a gravitational force $F = mg$ when stationary on the launchpad.

What is the gravitational force on the astronaut when the spacecraft is launched vertically upwards with an acceleration of $0.2g$?

A $1.2mg$ **B** mg **C** $0.8mg$ **D** 0

11 A beam of α-particles collides with a lead sheet. Each α-particle in the beam has a mass of 6.6×10^{-27} kg and a speed of $1.5 \times 10^{7}\,\text{m s}^{-1}$.

5.0×10^{4} α-particles per second collide with an area of $1.0\,\text{cm}^2$ of lead. Almost all of the α-particles are absorbed by the lead so that they have zero speed after collision.

What is an estimate of the average pressure exerted on the lead by the α-particles?

A 5.0×10^{-15} Pa

B 5.0×10^{-13} Pa

C 5.0×10^{-11} Pa

D 5.0×10^{-9} Pa

12 An object in air is thrown upwards and towards the left.

Which diagram shows the force(s) acting on the body when it is at its highest point?

A

B

C



D



Space for working

13 A particle is in a uniform field. The particle experiences a force in the opposite direction to the field.

Which field is the particle in, and on which property of the particle is the field acting?

	field	property of particle on which the field acts
A	electric	charge
B	electric	current
C	gravitational	mass
D	gravitational	weight

14 An archer draws his bowstring back to position X. The bowstring and arrow are shown. The tension T in the string is also shown. Then he draws the bowstring back further to position Y.

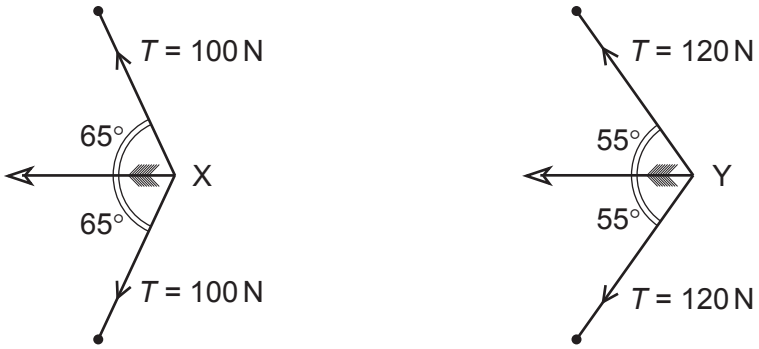

The resultant force on the arrow is greater when the arrow is released from position Y.

What is the increase in force?

A 15 N **B** 27 N **C** 40 N **D** 53 N

Space for working

15 A uniform metre rule of weight 2.0 N is pivoted at the 60 cm mark. A 4.0 N weight is suspended from one end, causing the rule to rotate about the pivot.

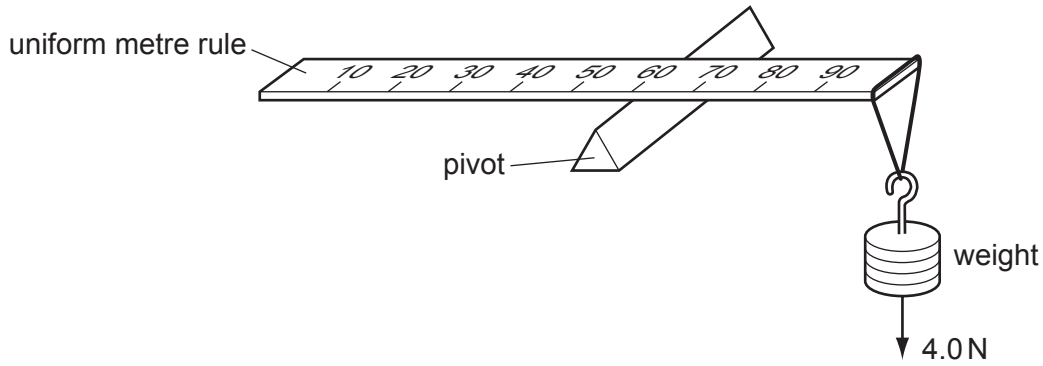

At the instant when the rule is horizontal, what is the resultant turning moment about the pivot?

A zero **B** 1.4 N m **C** 1.6 N m **D** 1.8 N m

16 What is the internal energy of a system?

A the amount of heat supplied to the system

B the random energy of the atoms of the system

C the total kinetic energy of the system

D the total potential energy of the system

Space for working

17 The diagram shows a barrel of weight 1.0×10^3 N on a frictionless slope inclined at 30° to the horizontal.

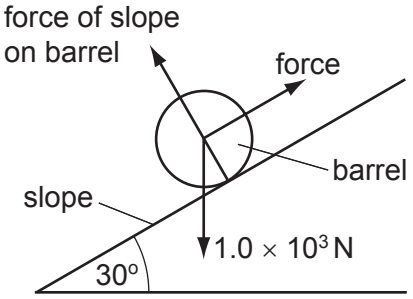

A force is applied to the barrel to move it up the slope at constant speed. The force is parallel to the slope.

What is the work done in moving the barrel a distance of 5.0 m up the slope?

A 2.5×10^3 J **B** 4.3×10^3 J **C** 5.0×10^3 J **D** 1.0×10^4 J

18 A car travelling on a level road at a steady 20 m s^{-1} against a constant resistive force develops a power of 40 kW.

What is the magnitude of the resistive force?

A 200 N **B** 800 N **C** 2000 N **D** 4000 N

19 A turbine at a hydroelectric power station is situated 30 m below the level of the surface of a large lake. The water passes through the turbine at a rate of 340 m^3 per minute.

The overall efficiency of the turbine and generator system is 90%.

What is the output power of the power station? (The density of water is 1000 kg m^{-3}.)

A 0.15 MW **B** 1.5 MW **C** 1.7 MW **D** 90 MW

Space for working

© UCLES 2013

20 Below are four short paragraphs describing the molecules in a beaker of water at 50 °C.

Which paragraph correctly describes the molecules?

A The molecules all travel at the same speed. This speed is not large enough for any of the molecules to leave the surface of the water. There are attractive forces between the molecules.

B The molecules have a range of speeds. Some molecules travel sufficiently fast to leave the surface of the water. There are no forces between the molecules.

C The molecules have a range of speeds. The fastest molecules are unable to leave the surface of the water. There are attractive forces between the molecules.

D The molecules have a range of speeds. Some molecules travel sufficiently fast to leave the surface of the water. There are attractive forces between the molecules.

21 Which two substances are normally both crystalline?

A copper and diamond

B copper and glass

C diamond and glass

D diamond and rubber

Space for working

© UCLES 2013

22 Water in a bath varies in depth from 20.0 cm at the shallow end to 30.0 cm at the end with the plug.

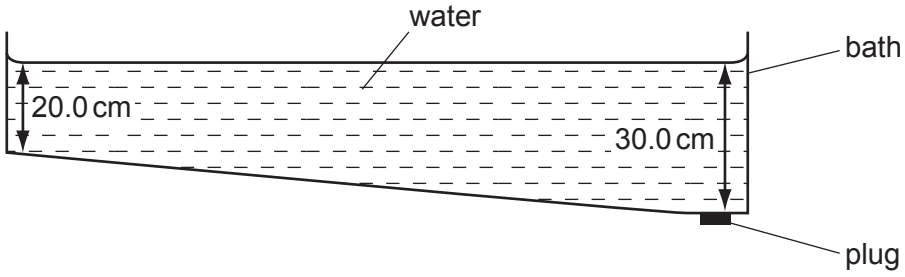

The density of the water is 1000 kg m^{-3}.

What is the pressure of the water acting on the plug?

A 1960 Pa **B** 2450 Pa **C** 2940 Pa **D** 4900 Pa

23 Which properties best describe modelling clay?

A brittle and ductile

B ductile and elastic

C elastic and plastic

D plastic and ductile

24 A steel spring has a spring constant of 150 N m^{-1}. When a 25 N weight is hung from the spring, it has a stretched length of 55 cm.

What was the original length of the spring?

A 0.38 m **B** 0.49 m **C** 0.61 m **D** 0.72 m

Space for working

25 The diagram shows a sketch of a wave pattern, over a short period of time.

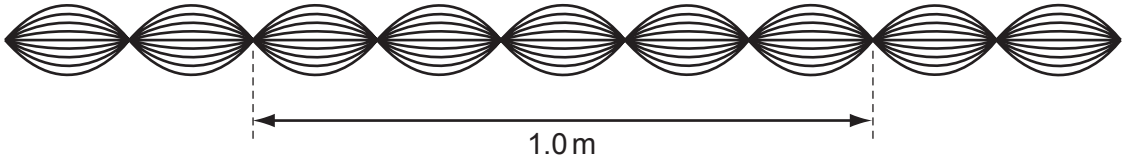

Which description of this wave is correct?

A The wave is longitudinal, has a wavelength of 20 cm and is stationary.

B The wave is transverse, has a wavelength of 20 cm and is stationary.

C The wave is transverse, has a wavelength of 40 cm and is progressive.

D The wave is transverse, has a wavelength of 40 cm and is stationary.

26 Which statement about a light wave and a sound wave is correct?

A Both can be polarised.

B Both can travel through free space.

C Both have a frequency inversely proportional to their wavelength.

D Both have an intensity proportional to their amplitude.

Space for working

© UCLES 2013

27 The sound from a loudspeaker placed above a tube causes resonance of the air in the tube.

A stationary wave is formed with two nodes and two antinodes as shown.

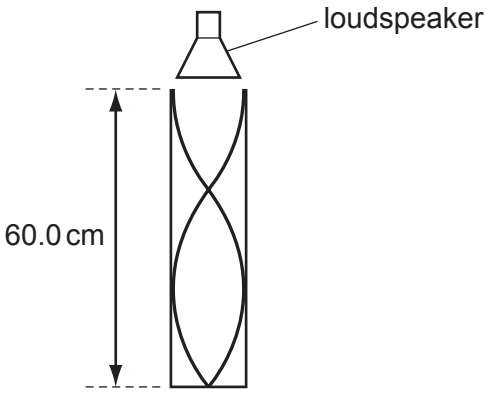

The speed of sound in air is $330\,m\,s^{-1}$.

What is the frequency of the sound?

A 413 Hz **B** 550 Hz **C** 830 Hz **D** 1650 Hz

28 Light of wavelength λ passes through a diffraction grating with slit spacing d. A series of lines is observed on a screen.

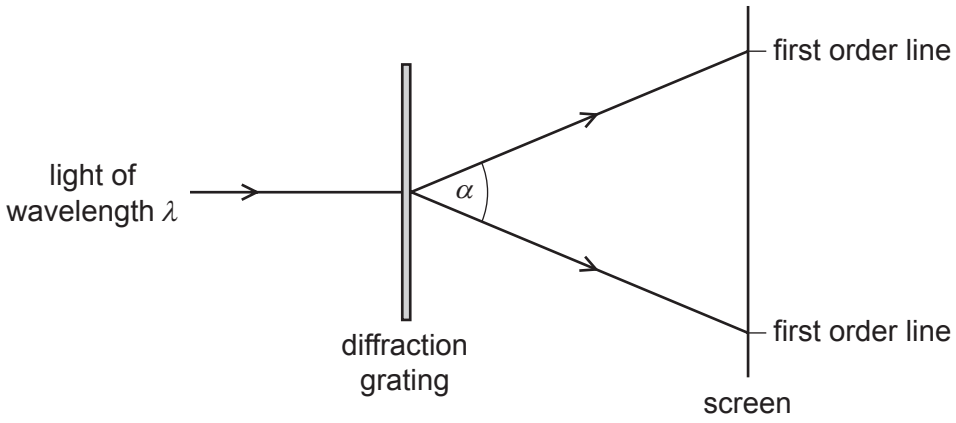

What is the angle α between the two first order lines?

A $\sin^{-1}\left(\frac{\lambda}{2d}\right)$ **B** $\sin^{-1}\left(\frac{\lambda}{d}\right)$ **C** $2\sin^{-1}\left(\frac{\lambda}{2d}\right)$ **D** $2\sin^{-1}\left(\frac{\lambda}{d}\right)$

Space for working

29 A student connects two loudspeakers to a signal generator.

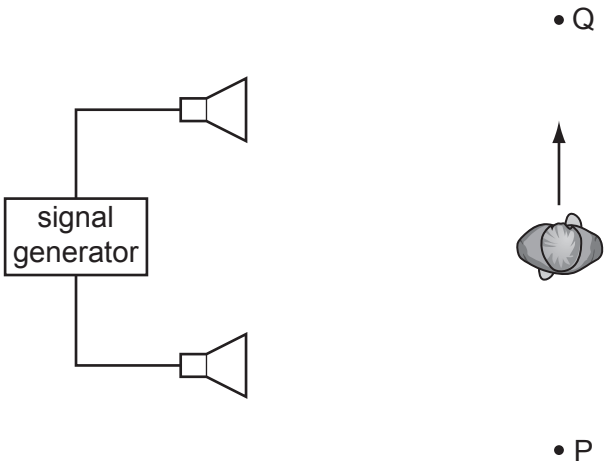

As the student walks from P to Q, he notices that the loudness of the sound rises and falls repeatedly.

What causes the loudness of the sound to vary?

A diffraction of the sound waves

B interference of the sound waves

C polarisation of the sound waves

D reflection of the sound waves

Space for working

30 When plane-polarised light of amplitude A is passed through a polarising filter as shown, the amplitude of the light emerging is $A\cos\theta$.

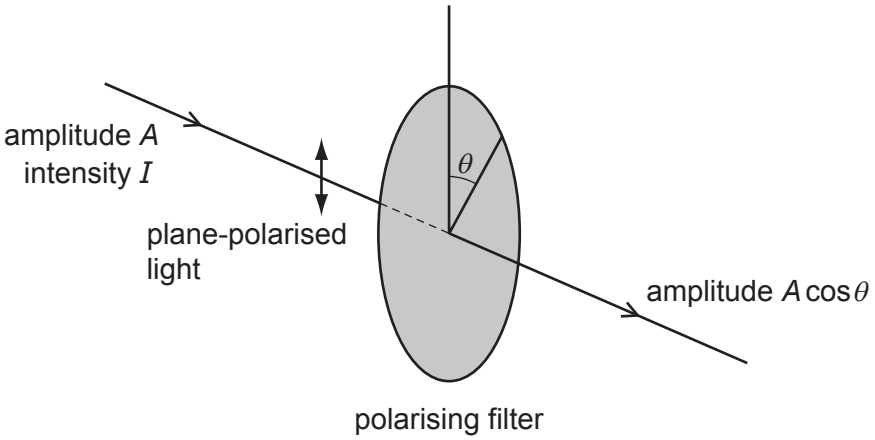

The intensity of the initial beam is I.

What is the intensity of the emerging light when θ is 60.0°?

A $0.250\,I$ **B** $0.500\,I$ **C** $0.750\,I$ **D** $0.866\,I$

Space for working

31 Two vertical conducting plates X and Y are positioned so that they are separated by a distance of 6.0 mm in air. A 60 V d.c. supply is connected as shown.

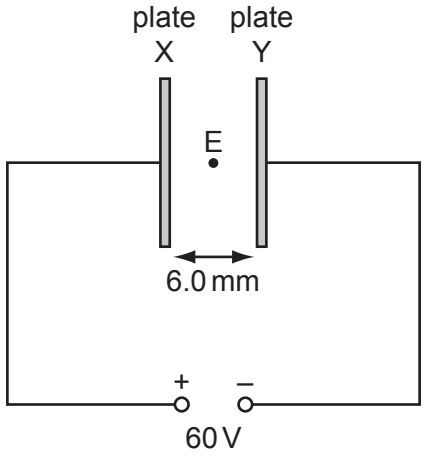

What is the electric field strength at E, a point midway between the plates?

A $1.0 \times 10^4\,V\,m^{-1}$ towards X

B $1.0 \times 10^4\,V\,m^{-1}$ towards Y

C $2.0 \times 10^4\,V\,m^{-1}$ towards X

D $2.0 \times 10^4\,V\,m^{-1}$ towards Y

32 Two parallel metal plates have a potential difference between them of 12 V. The distance between the plates is 1.0 mm.

What are the electric field strength between the plates and the work done on a charge of +3.9 μC to move the charge from the negative plate to the positive plate?

	electric field strength / $N\,C^{-1}$	work done / J
A	12	4.7×10^{-5}
B	12	47
C	12 000	4.7×10^{-5}
D	12 000	47

Space for working

© UCLES 2013

33 The diagram shows an electric circuit in which the resistance of the external resistor is $2R$ and the internal resistance of the source is R.

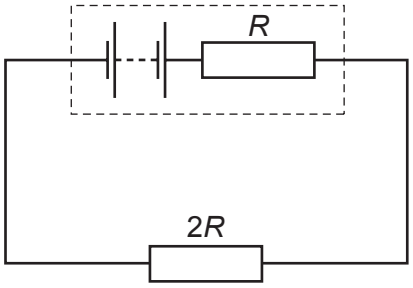

What is the ratio $\frac{\text{power in external resistor}}{\text{power in internal resistance}}$?

A $\frac{1}{4}$ **B** $\frac{1}{2}$ **C** 2 **D** 4

34 Two lamps are connected in series to a 250 V power supply. One lamp is rated 240 V, 60 W and the other is rated 10 V, 2.5 W.

Which statement most accurately describes what happens?

A Both lamps light at less than their normal brightness.

B Both lamps light normally.

C Only the 60 W lamp lights.

D The 10 V lamp blows.

Space for working

35 The wire of a heating element has resistance R. The wire breaks and is replaced by a different wire.

Data for the original wire and the replacement wire are shown in the table.

	length	diameter	resistivity of metal
original wire	l	d	ρ
replacement wire	l	$2d$	2ρ

What is the resistance of the replacement wire?

A $\frac{R}{4}$ **B** $\frac{R}{2}$ **C** R **D** $2R$

Space for working

© UCLES 2013

36 In the circuit below, P is a potentiometer of total resistance 10 Ω and Q is a fixed resistor of resistance 10 Ω. The battery has an electromotive force (e.m.f.) of 4.0 V and negligible internal resistance. The voltmeter has a very high resistance.

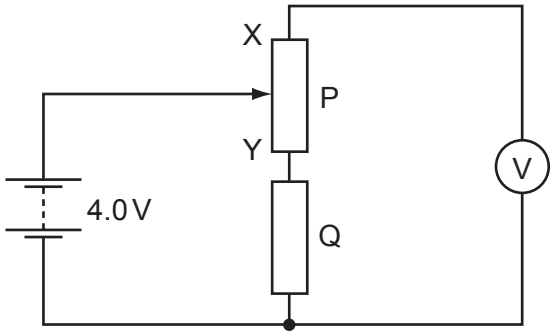

The slider on the potentiometer is moved from X to Y and a graph of voltmeter reading *V* is plotted against slider position.

Which graph would be obtained?

A

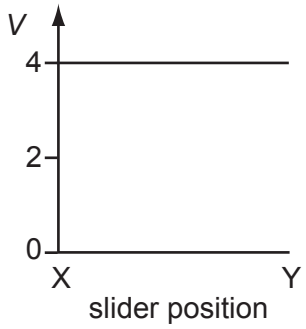

B

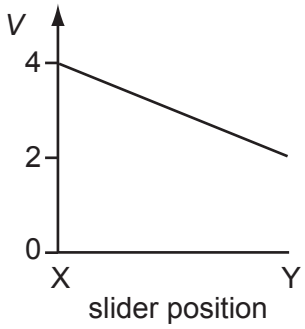

C

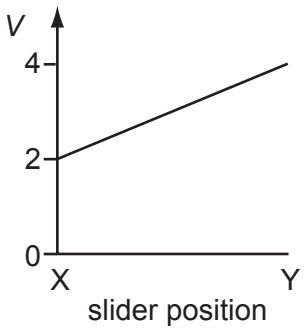

D

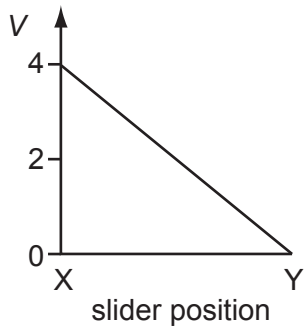

Space for working

37 A 2 Ω resistor and a 4 Ω resistor are connected to a cell.

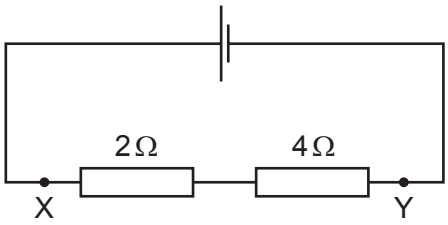

Which graph shows how the potential *V* varies with distance between X and Y?

A

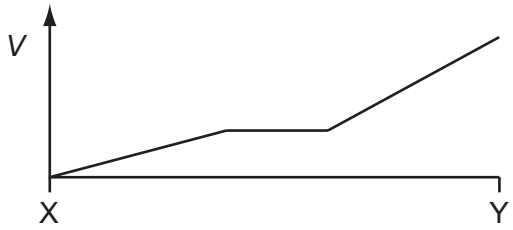

B

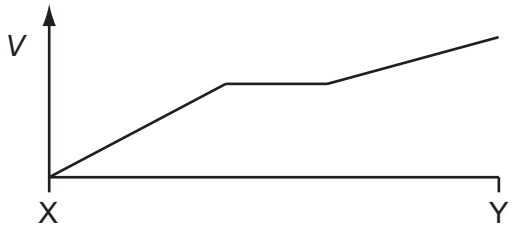

C

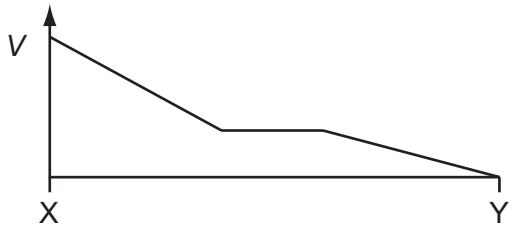

D

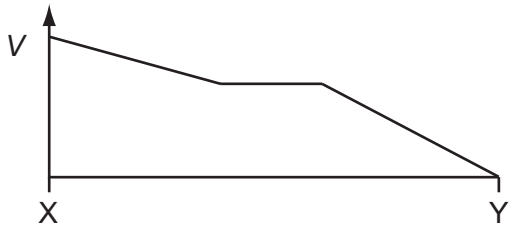

Space for working

© UCLES 2013

38 Four resistors of resistance R, $2R$, $3R$ and $4R$ are connected to form a network.

A battery of negligible internal resistance and a voltmeter are connected to the resistor network as shown.

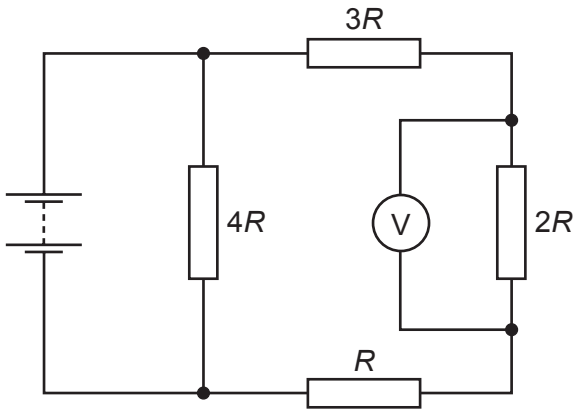

The voltmeter reading is 2 V.

What is the electromotive force (e.m.f.) of the battery?

A 2 V **B** 4 V **C** 6 V **D** 10 V

39 When α-particles are fired at a thin metal foil, most of the particles pass straight through but a few are deflected by a large angle.

Which change would increase the **proportion** of α-particles deflected by a large angle?

A using α-particles with greater kinetic energy

B using a foil made of a metal with fewer protons in its nuclei

C using a double thickness foil

D using an alpha source with a higher activity

Space for working

40 Plutonium-239 ($^{239}_{94}Pu$) decays by emitting α-radiation.

Which nuclide is formed from one of these decay reactions? (The product nuclides are represented by X.)

A $^{235}_{92}X$ **B** $^{237}_{92}X$ **C** $^{239}_{93}X$ **D** $^{239}_{95}X$

Space for working

Permission to reproduce items where third-party owned material protected by copyright is included has been sought and cleared where possible. Every reasonable effort has been made by the publisher (UCLES) to trace copyright holders, but if any items requiring clearance have unwittingly been included, the publisher will be pleased to make amends at the earliest possible opportunity.

University of Cambridge International Examinations is part of the Cambridge Assessment Group. Cambridge Assessment is the brand name of University of Cambridge Local Examinations Syndicate (UCLES), which is itself a department of the University of Cambridge.

© UCLES 2013